CALIBER 4120.B – 12½'''

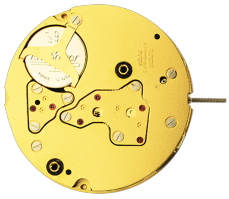

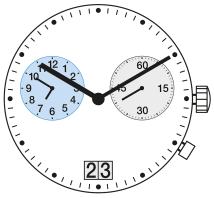

Product Specifications

Analog quartz movement	
Line	xtratech
Caliber	4120.B
Size	12½'''
Version Swiss Made	7 Jewels / gold plated
Version Swiss Parts	3 Jewels / nickel plated
Standard battery life	50 months
Standard hand fitting height	2

Features

- Repairable metal watch movement
- Power saving mechanism with pulled out stem: Reduction of consumption approximately 70%
- Very easy handling by one pusher
- Big date with quick change

Functions

- Multifunction
- Alarm
- Big date
- Small second
- 2 hands

CALIBER 4120.B – 12½'''

Technical Specifications

Diameter Total	28.60 mm
Case fitting	28.00 mm
Movement height	4.40 mm
Height over standard battery	4.40 mm
Movement rest	0.60 mm
Height over stem	1.90 mm
Length of stem travel	0.90 mm
Stem thread	0.90 mm
Useful torque second – typical	6 µNm
Useful torque minute – typical	300 µNm
Operating temperature	0 - 50 °C
Instantaneous rate	-10/ +20 sec/month
Resistance to magnetic fields	18.8 Oe
Resistance against shock	NIHS 91-10

Battery Specifications

Standard battery	No. 395
Standard battery life	50 months
Battery voltage	1.5 V
Current consumption – typical	1.42 µA (Date Mechanism not in Gear)
Current consumption – maximum	1.65 µA (Date Mechanism not in Gear)

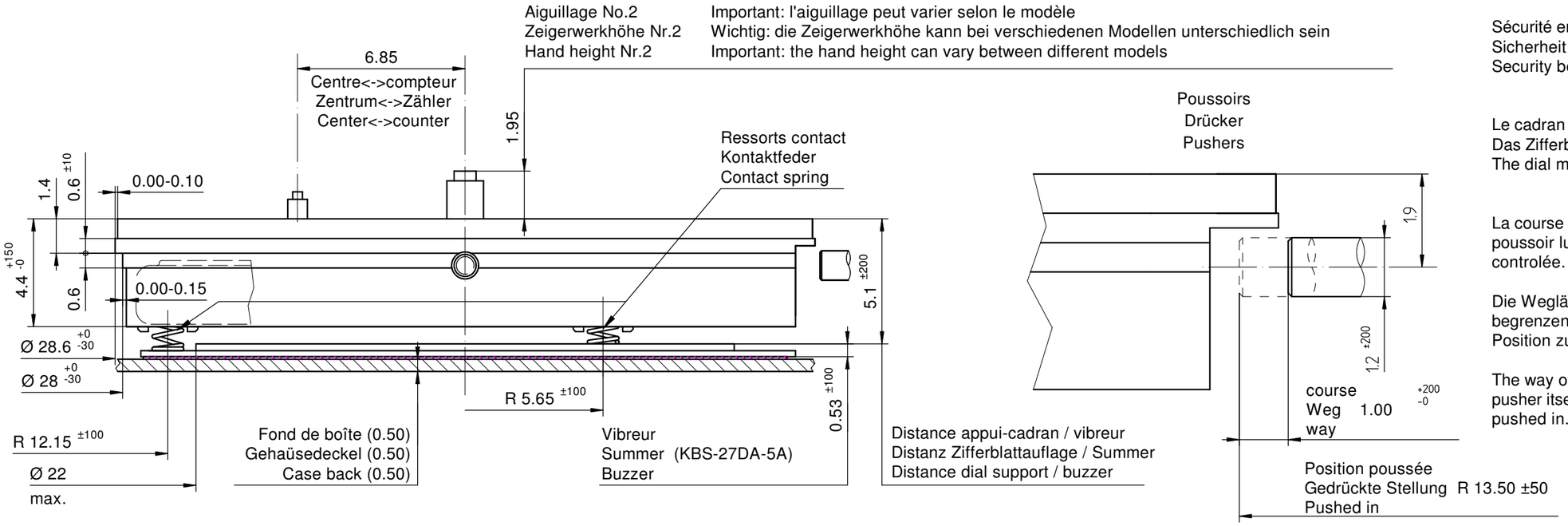

Sécurité entre l'aiguille des secondes et le verre:
Sicherheit zwischen Sekundenzeiger und Glas: 0.30mm
Security between second hand and glass:

Le cadran doit être tenu par la boîte
Das Zifferblatt muss durch die Schale gehalten werden
The dial must be hold by the case

La course du poussoir doit être limitée dans le poussoir lui-même. Sa position poussée doit être controlée.

Die Weglänge des Drückers ist im Drücker selbst zu begrenzen. In der gedrückten Stellung ist seine Position zu kontrollieren

The way of the pusher has to be limited in the pusher itself. Its position must be checked while pushed in.

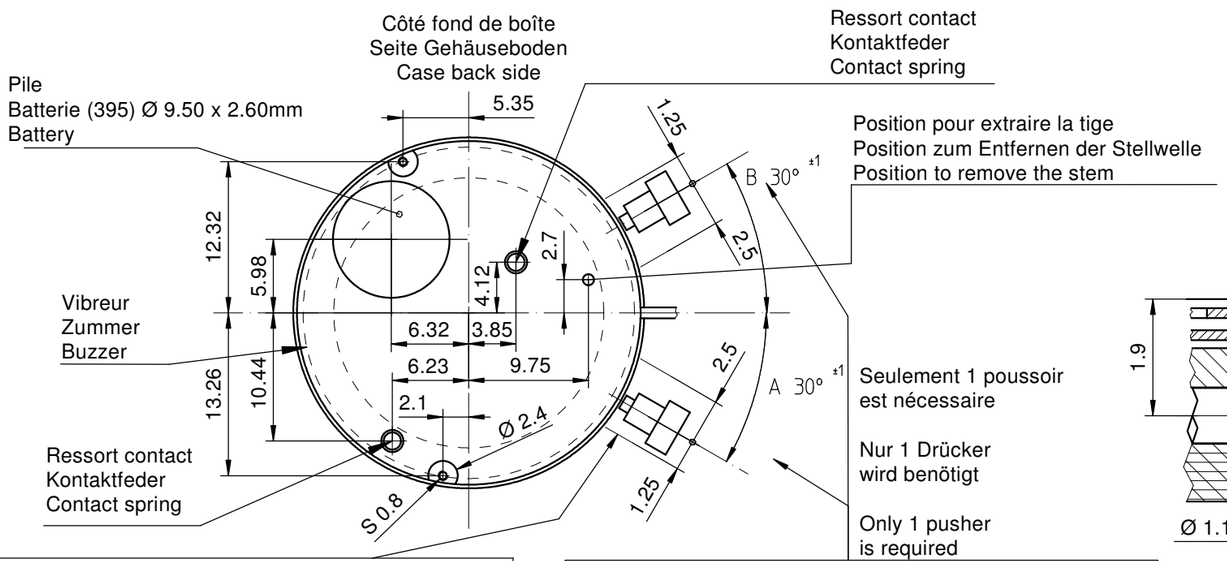

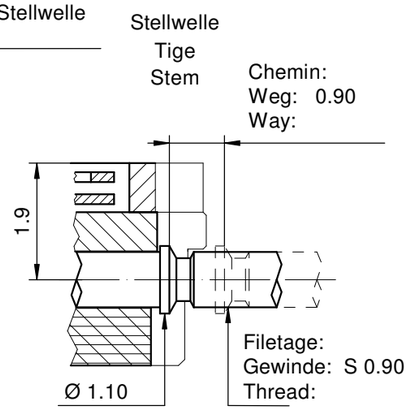

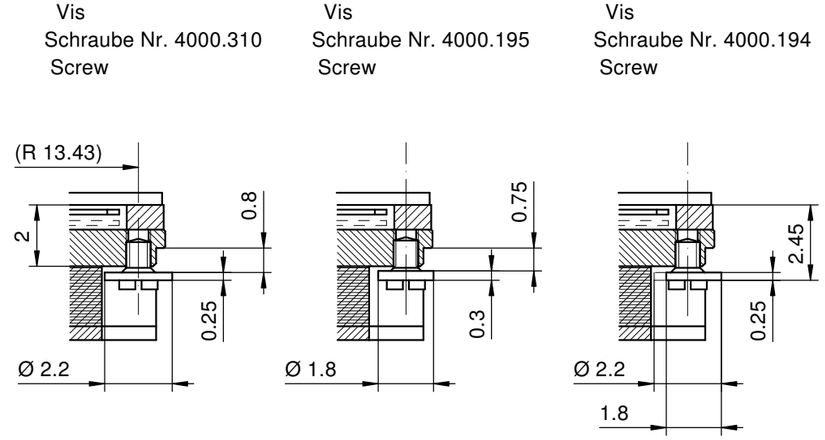

Dégagement cercle d'entourage pour poussoir
Freistellung Gehäusering für Drücker
Opening movement holder for pusher

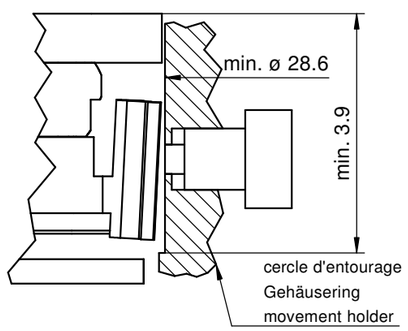

L'angle indiqué pour la direction du poussoir et la position doivent être respectés.
Pour un angle de 0° des poussiors A et B, voir plan 5000.345

Der angegebene Winkel für die Drückerrichtung und die Position müssen eingehalten werden.
Für einen Drückerwinkel von 0° bei A und B, siehe Zeichnung 5000.345

The indicated angle of the pusher direction and the position must be fullfilled. For pusher angles of 0° (pusher A and B), see drawing 5000.345.

Cage
Urwerkgestell 12½'''
Frame

Issued	14 Nov 2003	mk
Modified	05 Sep 2016 ÄA 34777	dh
Released	YES	
Tolerance	+/- 20 µm	
Scale	10 : 1 (5 : 1) (A3H)	

RONDA 4120.B

Sous réserve de modifications
Aenderungen vorbehalten
Modifications reserved

No. 5000.322 08

Angle Winkel Angle 30°	
Ø Dp	b
1.00	13.50
1.10	13.50
1.20	13.50
1.30	13.50
1.40	13.50

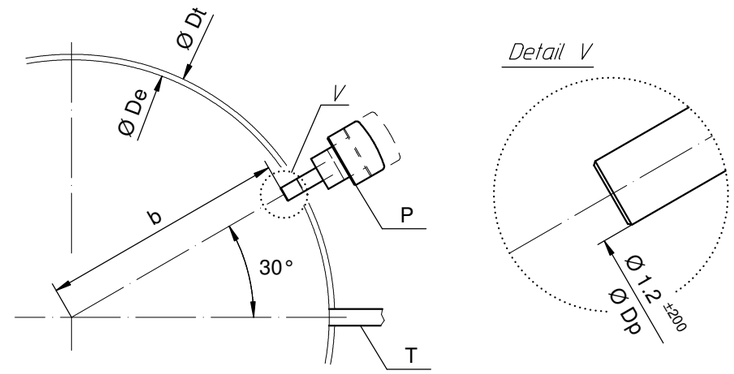

Angle Winkel Angle 0°		
Ø Dp	a	b
1.30	7.40	11.43
1.40	7.45	11.40

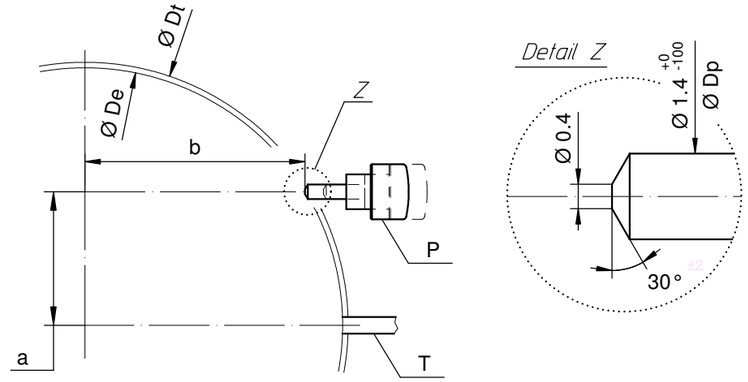

Angle Winkel Angle 20°		
Ø Dp	a	b
1.30	2.57	13.22
1.40	2.59	13.21

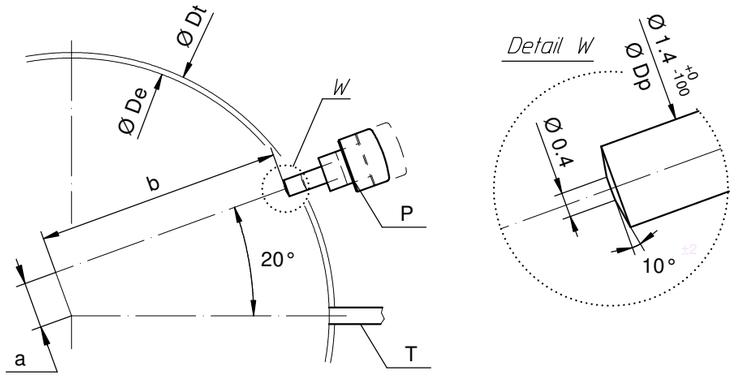

Angle Winkel Angle 15°		
Ø Dp	a	b
1.30	3.83	12.92
1.40	3.86	12.91

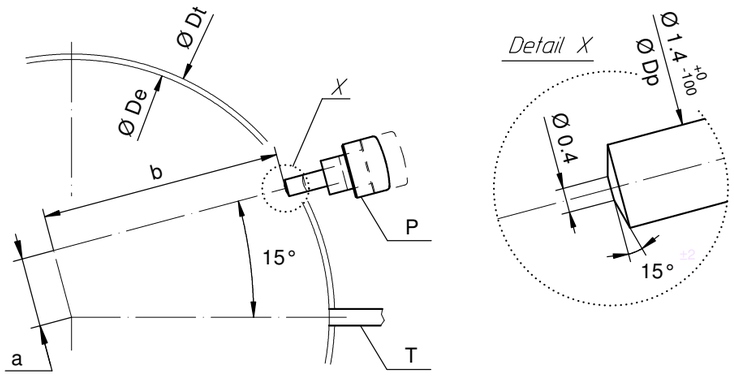

Angle Winkel Angle 10°		
Ø Dp	a	b
1.30	5.06	12.52
1.40	5.10	12.50

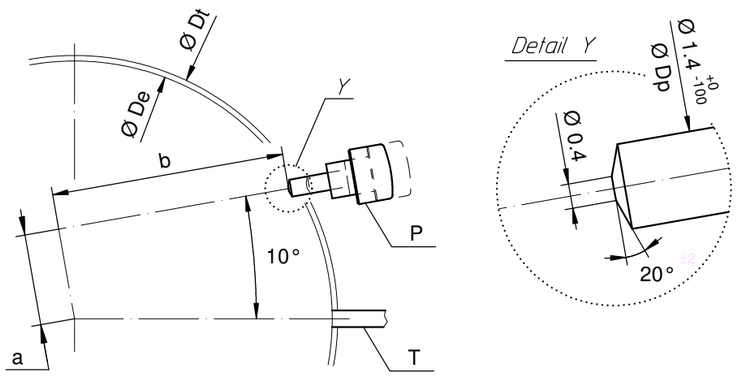

Ø De: diamètre d'encageage
Durchmesser der Gehäusepassung
fitting-diameter

Ø Dp: diamètre du poussoir
Drückerdurchmesser
pusher-diameter

Ø Dt: diamètre total
Totaldurchmesser
total-diameter

P: poussoir en position poussée
Drücker in gedrückter Stellung
pusher in pressed position

T: tige de mise à l'heure
Stellwelle
stem

Angle des poussoirs A et B
Winkel der Drücker A und B
Angle of pusher A and B

Issued	06 Sep 2004	mk	
Modified	30.März 2005 ÄA 1784	mk	
Released	YES		
Tolerance	+/- 20 µm		
Scale	10 : 1 (5 : 1) (A3H)		

RONDA | 4xxx.x, 5xxx.x

Sous réserve de modifications
Aenderungen vorbehalten
Modifications reserved

No. 5000.345 01

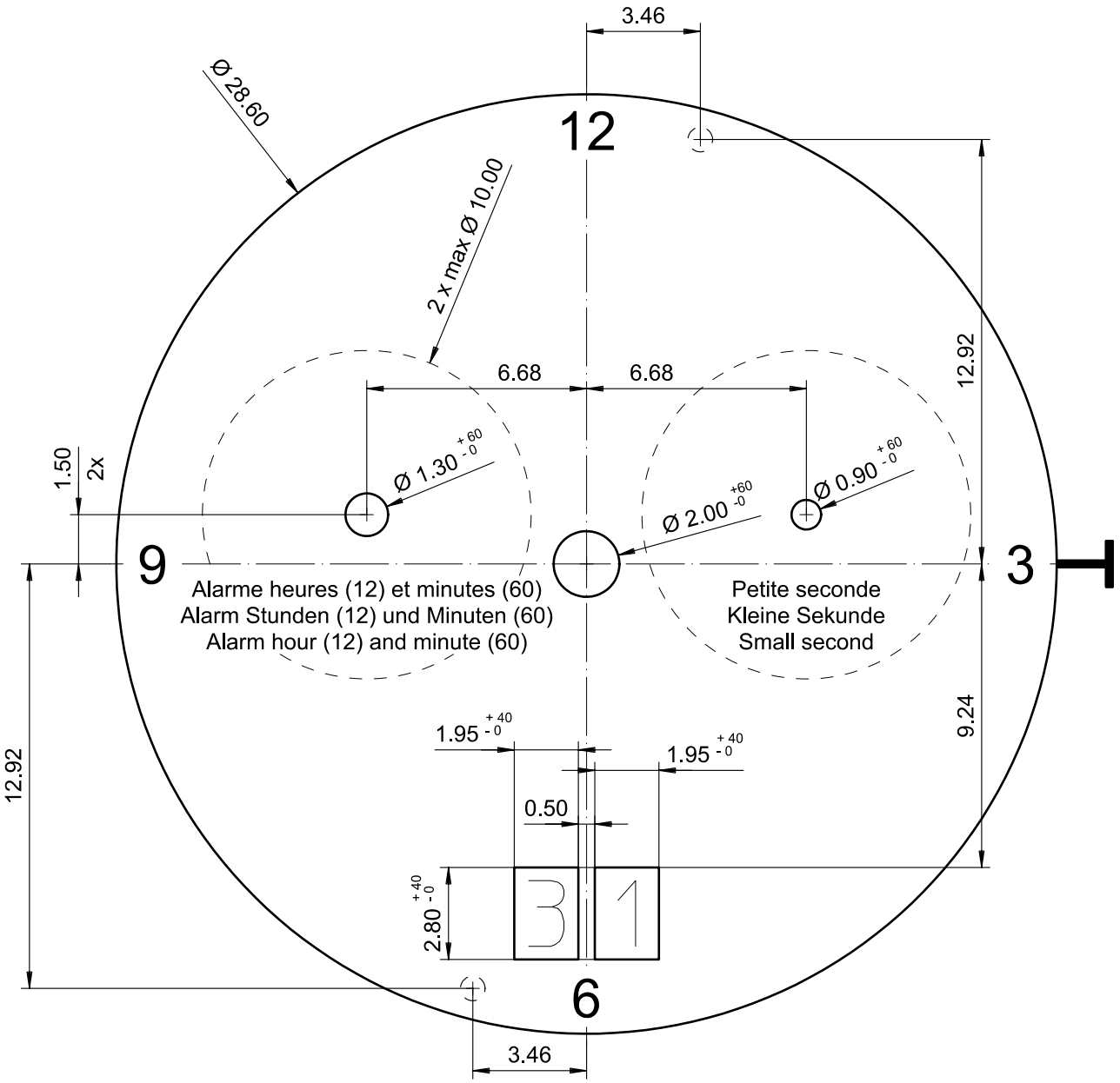

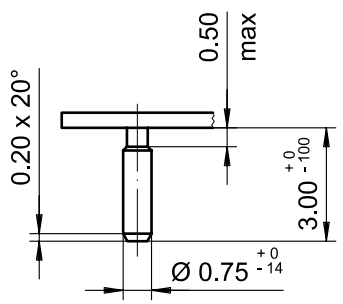

Epaisseur du cadran selon hauteur de l'aiguillage
Zifferblattdicke gemäss Zeigerwerkhöhen
Dial thickness according to hand fitting heights

Tige	Date
Stellw.	Datum
Stem	Date
3H	6H

Cadran
Zifferblatt
Dial

12½'''

Issued	13 Dez 2006	cw
Modified	15.Dez.2006 ÄA ----	cm
Released	YES	
Tolerance	+/- 20 µm	
Scale	5 : 1 (A4V)	

RONDA | 4120.B

Sous réserve de modifications
Aenderungen vorbehalten
Modifications reserved

No. 5010.695 | 02

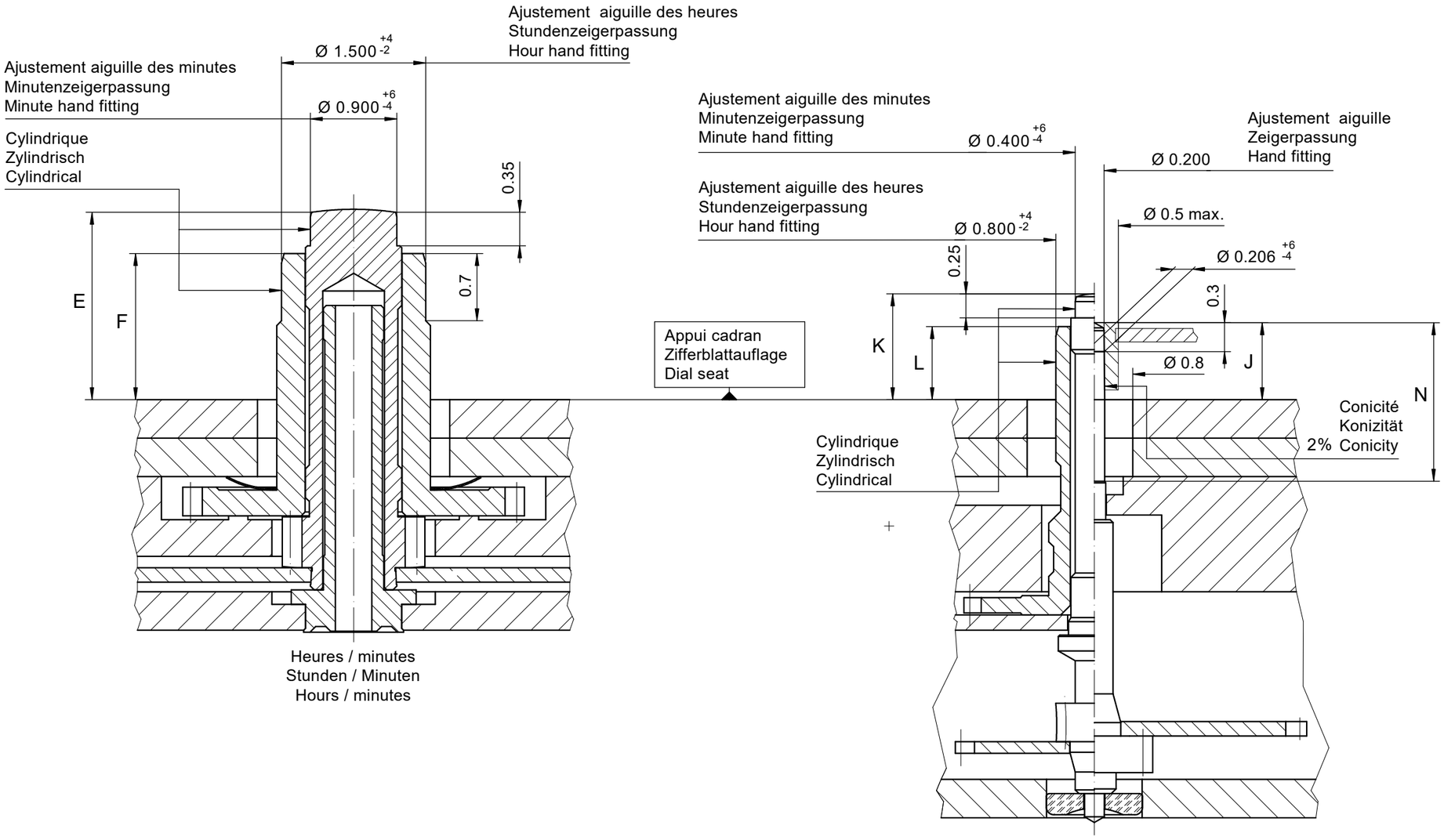

Aiguillages Zeigerwerkhöhe Hand fitting height						
	Dépassement Höhe über Zifferblattauflage Height over dial seat					
				Compteur 2 aig. 2 Zeiger Zähler 2 Hand counter		
No	Chaussée Minutenrohr Cannon-pinion	Roue des heures Stundenrad Hour wheel		Chaussée Minutenrohr Cannon-pinion	Roue des heures Stundenrad Hour wheel	Petite seconde Kleine Sekunde Small second
	E	F	N	K	L	J
2	1.95	1.52	1.65	1.10	0.76	0.80
-						

Aiguillages Zeigerwerkhöhe Hand fitting height						
	Peinture comprise / inkl. Farbe / Paint included					
	Epaisseur maximum du cadran Maximale Zifferblattdicke Maximum dial thickness					
			Compteur 2 aig. 2 Zeiger Zähler 2 Hand counter			
No	Sous l'aiguille des minutes Unter Minutenzeiger Under minute hand	Sous l'aiguille des heures Unter Stundenzeiger Under hour hand	Sous l'aiguille des minutes Unter Minutenzeiger Under minute hand	Sous l'aiguille des heures Unter Stundenzeiger Under hour hand	Sous l'aiguille de petite seconde Unter kleine Sekundenzeiger Under small second hand	Epaisseur des aiguilles Zeigerdicke Hands thickness
2	1.50	1.10	0.70	0.40	0.40	0.15
-						

	Aig. des minutes Minutenzeiger Minute hand	Aig. des heures Stundenzeiger Hour hand	Compteur 2 aiguille 2 Zeiger Zähler 2 Hand counter Aig. des minutes Minutenzeiger Minute hand	Compteur 2 aiguille 2 Zeiger Zähler 2 Hand counter Aig. des heures Stundenzeiger Hour hand	Aig. petite secondes Kleine Sekundenzeiger Small second hand	Lors de la pose d'aiguilles, le mouvement doit être soutenu. Beim Zeigersetzen muss das Werk abgestützt werden. The movement needs to be supported for hand setting.
mg max.	30	30	10	10	10	Masse / Masse / Weight *
µNm max.	0.80	0.80	0.03	0.03	0.07	Balourd / Unwucht / Unbalance *
gmm ^{2} max.	-	-	1.0	-	0.4	Inertie / Massenträgheit / Inertia *
N max.	40	40	30	30	30	Force de chassage / Aufpresskraft / Force

Aiguillages
Zeigerwerkhöhen 12½'''
Hand fitting heights

Issued	14.11.2003	mk	
Modified	17.12.2024	jk5228	
Released	YES		
Mod. No.	48988		
Tolerance	µm		
Scale	20 : 1	Page 1/1	A3

RONDA 4120.B

Sous réserve de modifications
Aenderungen vorbehalten
Modifications reserved

No. 3316.083 05

* En cas de données différentes, veuillez contacter le service après-vente

* Bei abweichenden Werten, bitte technischen Kundendienst anfragen

* In case of different values, please contact the customer service

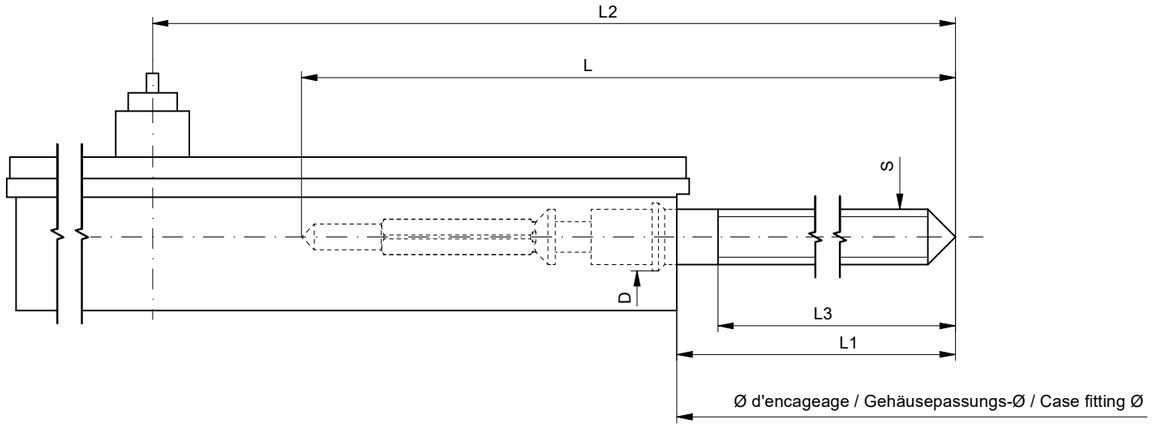

Tige de travail (intégrée dans le mouvement)
Arbeitstellwelle (im Werk eingebaut)
Working stem (implemented in the movement)

No. d'article Artikelnummer Part number	L	L1	L2	L3	S	D
3000.177.CO	20.00	10.23	24.23	10.15	0.90	1.10

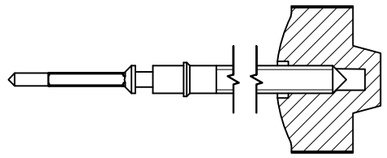

Couleur de la couronne Kronenfarbe Crown color	bleu foncé dunkelblau dark blue
Code	UN 5002

Tige (normale) / Stellwelle (normal) / Stem (normal)

No. d'article Artikelnummer Part number	L	L1	L2	L3	S	D
3000.177	20.00	10.23	24.23	10.15	0.90	1.10
3000.191	32.00	22.23	36.23	22.15	0.90	1.10

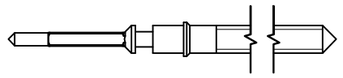

Couronne normale
Normale Krone
Normal crown

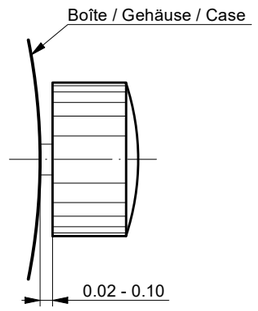

Couronne vissée
Geschraubte Krone
Screwed crown

Force ⇦ min. Kraft ⇦ min. Force ⇦ min.	10 N
Force ⇦ max. Kraft ⇦ max. Force ⇦ max.	15 N

Rallonge de tige / Stellwelle Verlängerung / Stem extension

No. d'article Artikelnummer Part number	L4	L5 (min)	L6	S1	S2	D1
3000.040	12.00	1.90	2.60	0.90	0.90	1.35

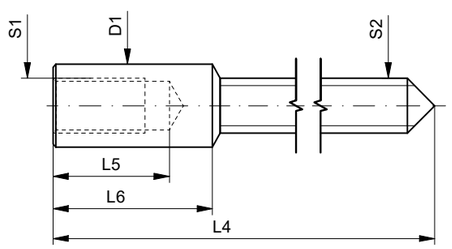

Tige (dimensions / forces)
Stellwelle (Dimesionen / Kräfte)
Stem (dimensions / forces)

RONDA 4120.B

Issued	05.09.2012	
Modified	17.12.2024	
Released	YES	
Mod. No.	48988	
Tolerance	---	
Scale	---	Page 1 / 1 A3

Sous réserve de modifications
Aenderungen vorbehalten
Modifications reserved

No.	5030.018	03

Movement holder
Removing setting stem
H5XXX.1T

Movement holder
Setting hands
H5XXX.1A4

PCB-Alarm
Installing Piezo function for H5XXX.1A4
H5XXX.1P

Fitting dial and hands

- Crown in position II
- Wind crown, until date 02 appears
- Crown in position III
- Wind hour hand forwards, until date changes to 03
- Remove working hand
- Fit dial
- Point all hands towards 12 o'clock
- Set time
- Set alarm reference time**
- Crown in position II
- Set date
- Crown in position I

Date switching duration:
First and tenth digit discs *~2hrs*

****Setting alarm reference time**

A. Activate pusher B min. 2 secs (activating reference time mode)
B. Synchronise reference time with actual time by pressing pusher B:
   - Short press (< 1 sec.) → +1 minute
   - Medium press (1-2 secs) → +1 hour
   - Long press (> 2 secs) → continuously

Details: *See Instructions Manual*

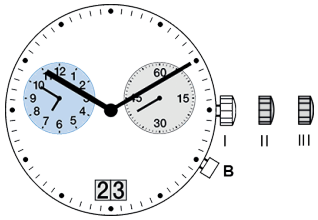

General Instructions

Removing the setting stem can only be effected in Pos. I.

The use of supporting screws is essential when mounting the hands.

Permitted hand setting strengths:

Hr / min. hands: <40N

Other hands: <30N

During quick date correction (setting stem in position II), a date switching speed of 5 d/s must not be exceeded.

RONDA xtratech – Movement Cal. 4120.B

User's Manual English

You have decided to buy a watch, which was assembled by a watchmaker using a Ronda movement. Please note that no watches are produced or distributed under the Ronda brand.

In case of repairs, guarantee claims and questions concerning the functioning of a watch, purchasers and consumers should contact their retailer or the watch manufacturer, for which the relevant information can be found in the sales or guarantee documentation provided with the watch.

Description of the display and control buttons

Display elements

Control buttons

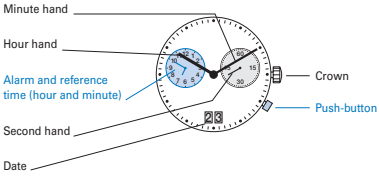

01

Setting the time

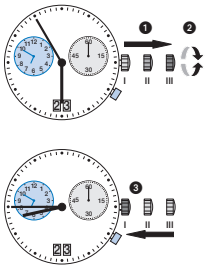

1. * Pull out the crown to position **III** (the watch stops).
2. Turn the crown until you reach the correct time **8:45**.
3. * Push the crown back into position **I**.

Please note:
* In order to set the time to the exact second, 1 must be pulled out when the second hand is in position «60».
Once the hour and minute hands have been set, 3 must be pushed back into position **I** at the exact second.

02

Setting the date (quick mode)

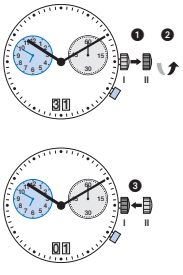

1. Pull out the crown to position **II** (the watch continues to run).
2. Turn the crown until the correct date 01 appears.
3. Push the crown back into position **I**.

Please note:
The date of the following day must be set in the calendar changing phase between approx. 9 PM and midnight.

Setting the date too quickly in quick mode can result in the incorrect date being displayed. Switching the date between 01 and 31 (position II) restores the synchronisation.

03

Setting the time and date

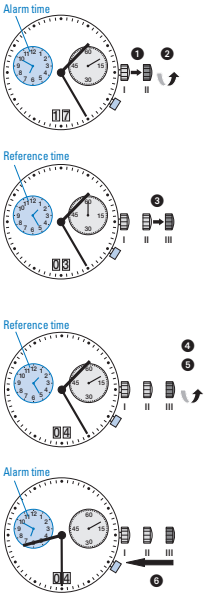

Example:
– Date / time on the watch: 17 / 1:25 AM
– Present date / time: 04 / 8:30 PM

1. Pull out the crown to position **II** (watch continues to run).
2. Turn the crown until yesterday's date appears 03.
3. Pull out the crown to position **III** (the second hand stops. The display changes from alarm time to reference time.)
4. Turn the crown until the correct date 04 appears.
5. * Continue to turn the crown until the current time 8:30 PM appears.
6. Push the crown back into position **I** (the display changes from reference to alarm time).

Please note:
Resetting the time also requires the identical correction of the reference time.
Please refer to **«setting the reference time»**.

* Please observe the AM/PM clock rhythm.

04

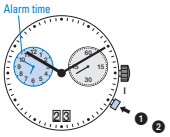

Setting the alarm time

1. **Activate the setting mode**
Press the push-button for at least 2 seconds. As soon as the small minute hand jumps forward 1 minute, this mode is active.
2. **Setting**
Short pressing (less than 1 second): the alarm time is moved forward by the minute.
Long pressing (longer than 2 seconds): the alarm time is moved forward until the push-button is released.

Please note:
If the push-button is not activated for 10 seconds, the setting mode of the alarm time deactivates itself. At the same time, 2 beeps are emitted to indicate that the alarm is switched on.

05

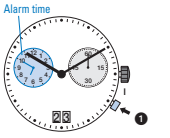

Switching the alarm on / off

1. The alarm is switched on / off by briefly pressing the push-button:

2 beeps → alarm switched on

1 beep → alarm switched off

Please note:
The alarm can be set maximum 12 hours before the desired alarm time.

Once the set alarm time has been reached, a signal is emitted for 20 seconds.
This signal is repeated after two minutes.
Following brief pressing of the push-button, the signal is immediately switched off.

06

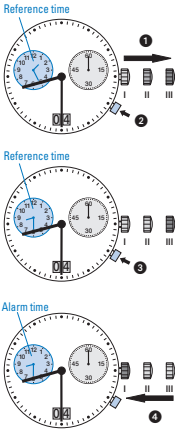

Setting the reference time

1. Pull out the crown to position **III** (second hand stops. The display changes from alarm time to reference time.)
2. **Activating the setting mode**
Press the push-button for at least 2 seconds. As soon as the small minute hand jumps forwards one minute, this mode is active.
3. **Short pressing** (less than 1 second): the reference time is moved forwards by the minute.
Medium pressing: (1–2 seconds): the reference time is moved forwards by the hour.
Long pressing (longer than 2 seconds): the reference time is moved forwards until the push-button is released.
4. Push the crown back into position **I** (the display changes from reference time to alarm time).
A 1 beep signal indicates that the alarm is switched off.

Please note:
The reference time must display the same time as the current time. This means that resetting the current time also requires the identical correction of the reference time.
Afterwards, the alarm time has to be reset.

What is the reference time?

The current time is displayed by means of the hour and minute hand.

Parallel to the current time, the reference time runs in the background: the alarm time refers itself to this reference time. Thus, resetting the time also requires the identical correction of the reference time.

If the reference time is not synchronised with the current time, this results in the alarm signal being emitted at a different time to the set alarm time.

07

08/2023

Battery type: 395 / SR927SW
Accuracy: +20 / -10 seconds per month

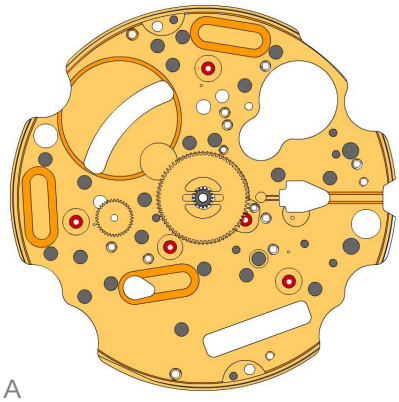

A

2000.574.G 1.		Main plate
3305.290.CO 2.		Cannon pinion with driver (Aig.2, closed)
3301.243 3.		Hour wheel (counter 24h)

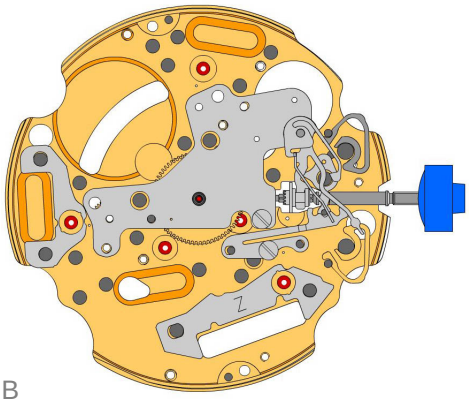

B

2030.017.CO 4.		Centre bridge Center bridge held by 1 screw 4000.250. Parts 2030.017.CO, 3004.223 and 3500.059 must be exchanged together.
4000.250 5.		Screw
3001.055.FI 6.		Sliding pinion
3000.177.CO 7.		Setting stem
3017.049 8.		Setting lever
3905.049 9.		Setting lever jumper (3 positions) Setting lever jumperheld by 1 screw 4000.250.
4000.250 10.		Screw
3015.081 11.		Yoke (3 positions) Parts 3015.081 and 3905.067 must be exchanged together.
3905.067 12.		Yoke spring Tensioning the spring arm. Parts 3015.081 and 3905.067 must be exchanged together.
3406.030 13.		Pusher jumper B Put the grey jumper between the two posts on the further side.
3406.038 14.		Pusher jumper A Put the yellow jumper between the two posts on the closer side.
3622.040 15.		Stator Mark |Z| on stator.
3622.039 16.		Stator (counter 6h, 9h, chrono)

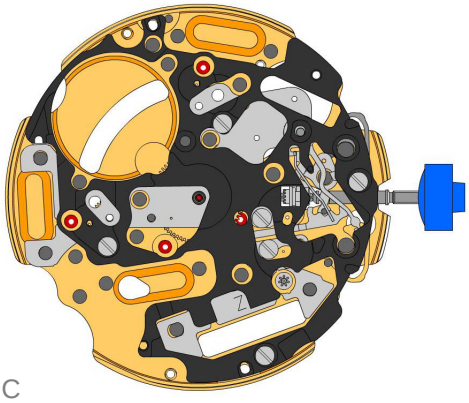

C

3603.079 17.		Plastic bracket Plastic bracket held by 4 screws 4000.250.
4000.250 18.		Screw
3715.094.RK 19.		Rotor

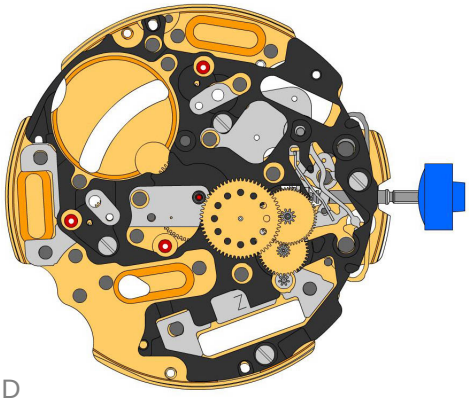

D

3147.046.CO 20.	Intermediate wheel
3136.142.CO 21.	Second wheel (long)
3122.056.CO 22.	Third wheel

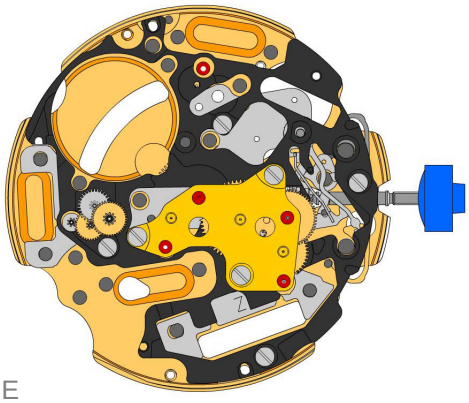

E

2020.148.G 23.	Train wheel bridge Train wheel bridge held by 3 screws 4000.250.
4000.250 24.	Screw
3715.095.RK 25.	Rotor
3147.048.CO 26.	Intermediate wheel (counter)
3007.055.CO 27.	Minute wheel (counter 24h)
3402.007.CO 28.	Minute counting wheel (24h)

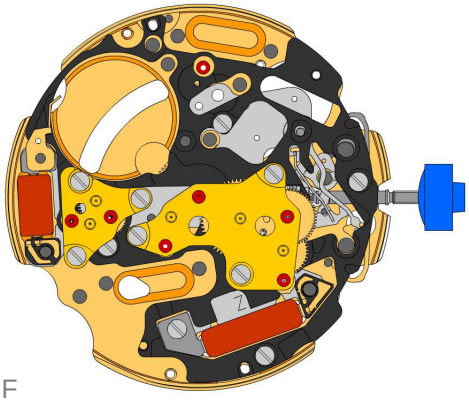

F

2020.149.G 29.	Counter train wheel bridge Counter train wheel bridge held by 3 screws 4000.250.
4000.250 30.	Screw
3621.053.RK 31.	Coil Attention: Please hold the coil only on the grey coil core. Coil held by 1 screw 4000.250.
3621.054.RK 32.	Coil (counter 9h, chrono) Attention: Please hold the coil only on the grey coil core.
4000.250 33.	Screw
3601.118 34.	Contact strip Contact strip held by 1 screw 4000.250.
4000.250 35.	Screw
3603.034 36.	Battery insulator
3503.054 37.	Tube
3503.054 38.	Tube

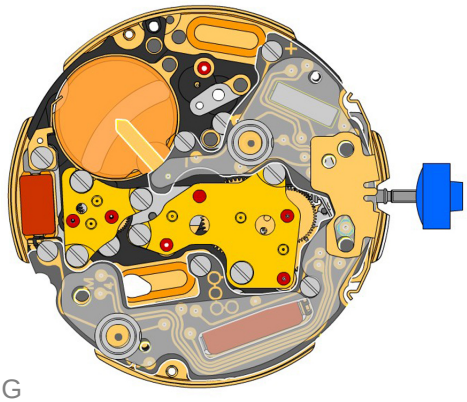

G

3612.176.4120 39.		Electronic module Electronic module held by 5 screws 4000.248. Electronic measurements may be realised now.
4000.248 40.		Screw
3603.069 41.		Circuit insulator
3603.070 42.		Contact insulator
3603.070 43.		Contact insulator
3601.107.G 44.		Pusher contact spring

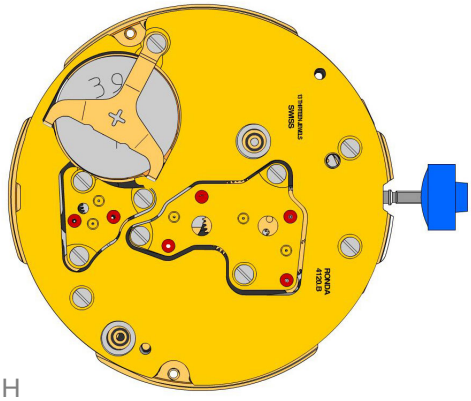

H

2130.160.G.M01.4120B 45.		Electronic module cover Electronic module held by 5 screws 4000.250.
3600.010.HGF 46.		Battery 395
3601.109.G 47.		Bridle + Bridle held by 1 screw 4000. 250.
4000.250 48.		Screw

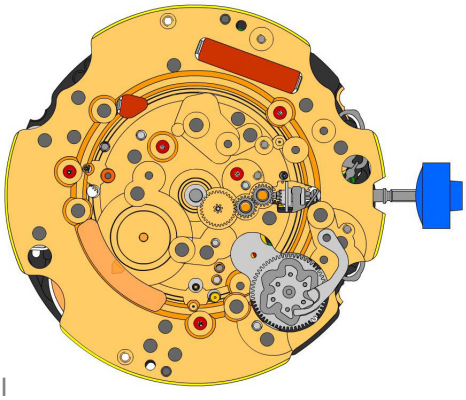

I

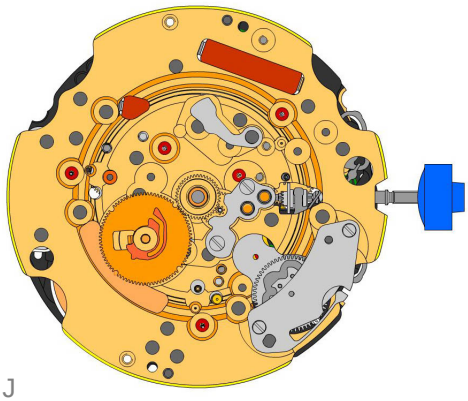

J

2000.574.G 49.		Main plate
3004.164 50.		Setting wheel
3004.164 51.		Setting wheel
3007.054.CO 52.		Minute wheel
2130.143 53.		Minute train bridge Minute train bridge held by 2 screws 4000.305.
4000.305 54.		Screw
3004.223 55.		Tens indicator driving wheel Parts 2030.017.CO, 3004.223 and 3500.059 must be exchanged together. The short tooth of the tens indicator driving wheel must point to the center of the movement.
3500.059 56.		Tens jumper Parts 2030.017.CO, 3004.223 and 3500.059 must be exchanged together.
2130.142 57.		Tens jumper maintaining plate Tens jumper maintaining plate held by 2 screws 4000.306. Tensioning the spring arm.
4010.306 58.		Screw
3301.242 59.		Hour wheel (Aig.2)
3315.016 60.		Friction spring
3004.224.CO 61.		Date indicator driving wheel
3500.049 62.		Date jumper

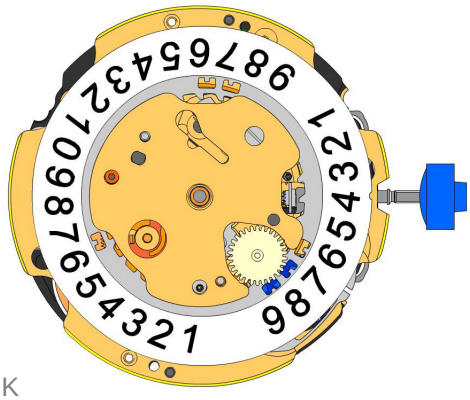

K

3504.214.AD.1.A 63.		Units indicator (standard) Nick of the indicator at 3 o`clock.
3147.054 64.		Tens intermediate wheel
2130.141 65.		Date indicator maintaining plate Date indicator maintaining plate held by 1 screw 4000.250.
3905.070 66.		Date jumper spring Insert the date jumper spring in the provided opening.

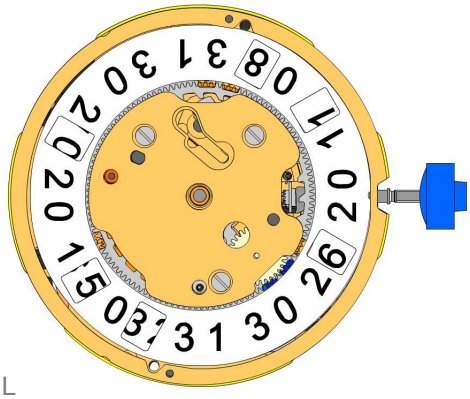

L

3504.215.AD.1.A 67.		Tens indicator (standard) Nick of the indicator at 3 o`clock.
2130.140.G 68.		Date mechanism maintaining plate Date mechanism maintaining plate held by 2 screws 4000.250.
4000.250 69.		Screw
3506.072.G 70.		Dial support
8200 71.		Moebius 8200
9014 72.		Moebius 9014
124 73.		Jismaa 124
9020 74.		Moebius 9020

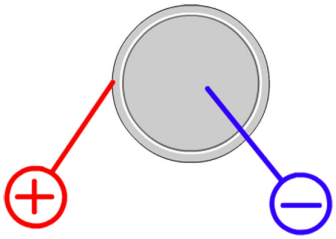

Battery	**395**
Voltage	**1.55 V**

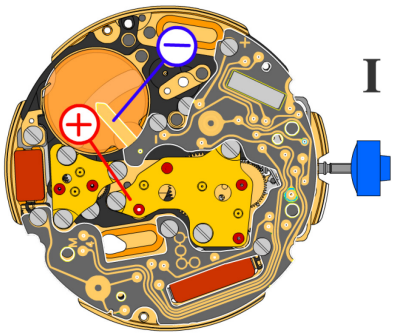

Setting stem in position I, calendar not in gear,
60 s measuring interval for rate and consumption:

Typical consumption	***1.42 µA***
Maximal consumption	***1.65 µA***
Rate	**-10s/M. .. +20s/M.**
Lower working voltage limit	**1.20 V**

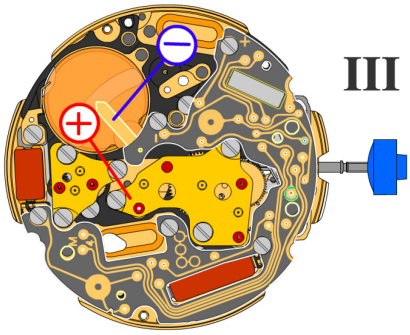

Setting stem in position III, 60 s measuring interval:

Typical consumption	***0.10 µA***
Maximal consumption	***0.30 µA***

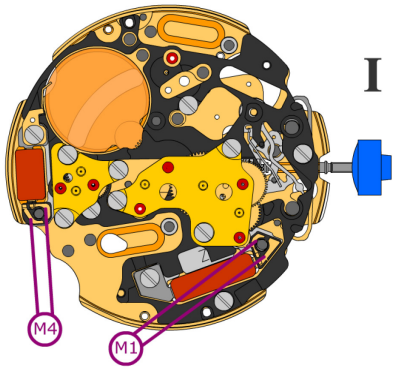

Coil resistance M1	**1.90 kΩ .. 2.10 kΩ**
Coil resistance M4	**1.68 kΩ .. 1.88 kΩ**

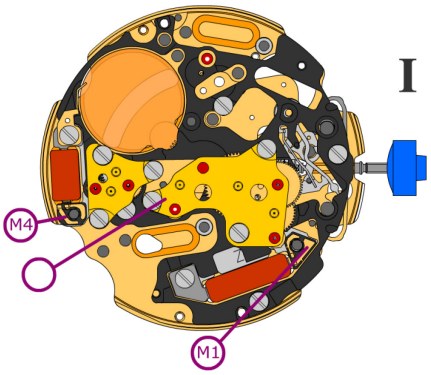

Coil isolation M1/M4	**∞ kΩ**

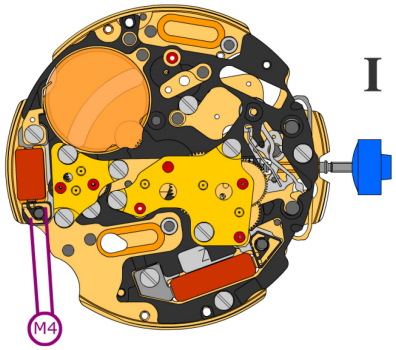

Signal generator (4.9 ms, 8 Hz):

Lower working voltage limit M4	**1.20 V**

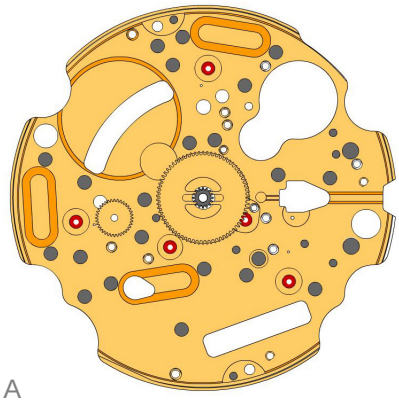

A

2000.574.G 1.		Main plate
3305.290.CO 2.		Cannon pinion with driver (Aig.2, closed)
3301.243 3.		Hour wheel (counter 24h)

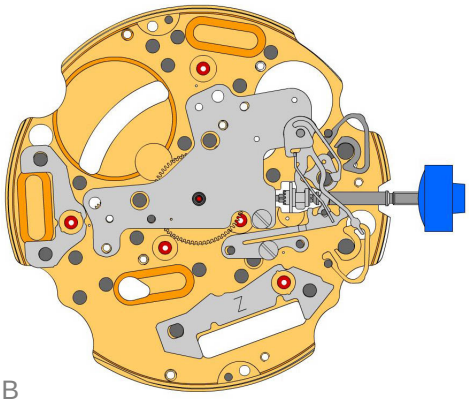

B

2030.024.CO 4.		Centre bridge Center bridge held by 1 screw 4000.250.
4000.250 5.		Screw
3001.055.FI 6.		Sliding pinion
3000.177.CO 7.	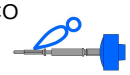	Setting stem
3017.049 8.		Setting lever
3905.049 9.		Setting lever jumper (3 positions) Setting lever jumperheld by 1 screw 4000.250.
4000.250 10.		Screw
3015.081 11.		Yoke (3 positions)
3905.067 12.		Yoke spring Tensioning the spring arm.
3406.030 13.		Pusher jumper B Put the grey jumper between the two posts on the further side.
3406.038 14.		Pusher jumper A Put the yellow jumper between the two posts on the closer side.
3622.040 15.		Stator Mark |Z| on stator.
3622.039 16.		Stator (counter 6h, 9h, chrono)

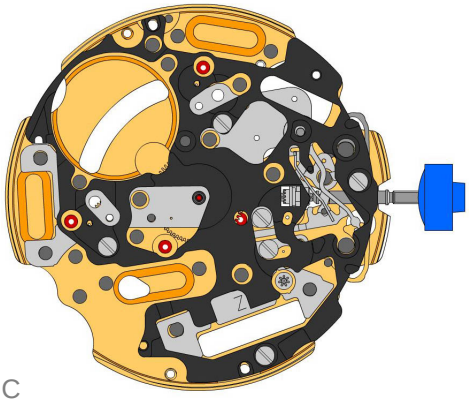

C

3603.079 17.		Plastic bracket Plastic bracket held by 4 screws 4000.250.
4000.250 18.		Screw
3715.094.RK 19.		Rotor

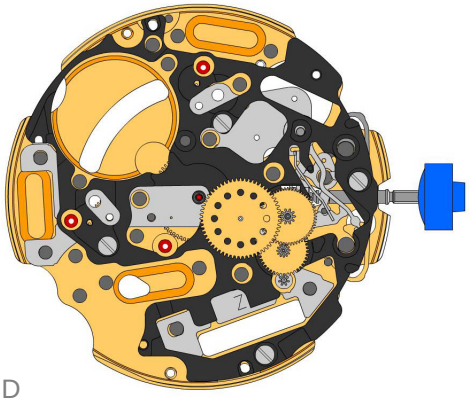

D

3147.046.CO 20.	Intermediate wheel
3136.142.CO 21.	Second wheel (long)
3122.056.CO 22.	Third wheel

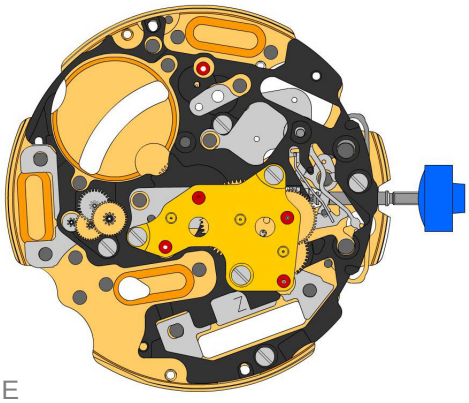

E

2020.148.G 23.	Train wheel bridge Train wheel bridge held by 3 screws 4000.250.
4000.250 24.	Screw
3715.095.RK 25.	Rotor
3147.048.CO 26.	Intermediate wheel (counter)
3007.055.CO 27.	Minute wheel (counter 24h)
3402.007.CO 28.	Minute counting wheel (24h)

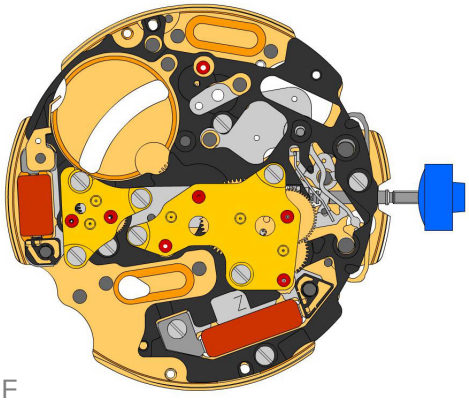

F

2020.149.G 29.	Counter train wheel bridge Counter train wheel bridge held by 3 screws 4000.250.
4000.250 30.	Screw
3621.053.RK 31.	Coil Attention: Please hold the coil only on the grey coil core. Coil held by 1 screw 4000.250.
3621.054.RK 32.	Coil (counter 9h, chrono) Attention: Please hold the coil only on the grey coil core.
4000.250 33.	Screw
3601.118 34.	Contact strip Contact strip held by 1 screw 4000.250.
4000.250 35.	Screw
3603.034 36.	Battery insulator
3503.054 37.	Tube
3503.054 38.	Tube

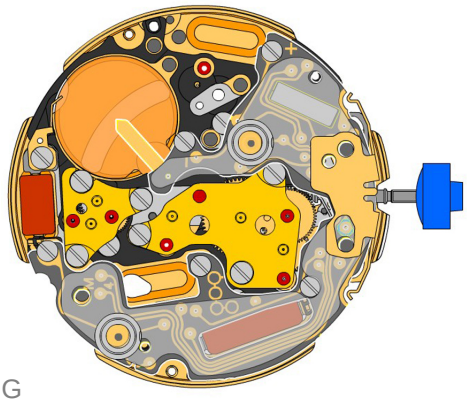

G

3612.176.4120 39.		Electronic module Electronic module held by 5 screws 4000.248. Electronic measurements may be realised now.
4000.248 40.		Screw
3603.069 41.		Circuit insulator
3603.070 42.		Contact insulator
3603.070 43.		Contact insulator
3601.107.G 44.		Pusher contact spring

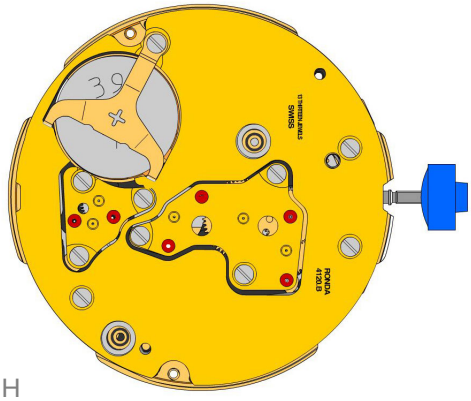

H

2130.160.G.M01.4120B 45.		Electronic module cover Electronic module held by 5 screws 4000.248.
3600.010.HGF 46.		Battery 395
3601.109.G 47.		Bridle + Bridle held by 1 screw 4000. 250.
4000.250 48.		Screw

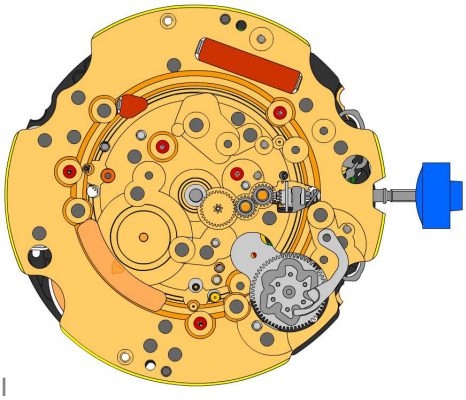

I

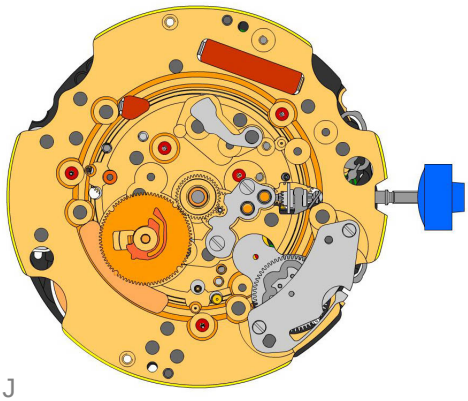

J

2000.574.G 49.		Main plate
3004.164 50.		Setting wheel
3004.164 51.		Setting wheel
3007.054.CO 52.		Minute wheel
2130.143 53.		Minute train bridge Minute train bridge held by 2 screws 4000.250.
4000.305 54.		Screw
3004.227 55.		Tens indicator driving wheel The short tooth of the tens indicator driving wheel must point to the center of the movement.
3500.075 56.		Tens jumper
2130.142 57.		Tens jumper maintaining plate Tens jumper maintaining plate held by 2 screws 4000.306. Tensioning the spring arm.
4010.306 58.		Screw
3301.242 59.		Hour wheel (Aig.2)
3315.016 60.		Friction spring
3004.224.CO 61.		Date indicator driving wheel
3500.049 62.		Date jumper

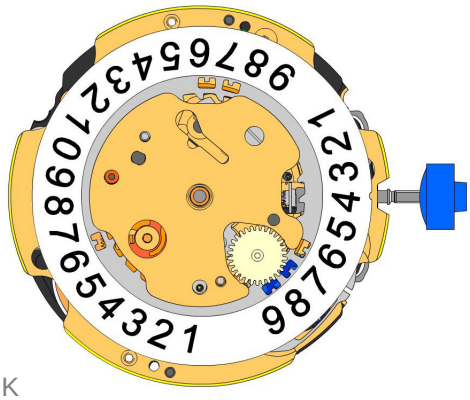

K

3504.214.AD.1.A 63.		Units indicator (standard) Nick of the indicator at 3 o`clock.
3147.054 64.		Tens intermediate wheel
2130.141 65.		Date indicator maintaining plate Date indicator maintaining plate held by 1 screw 4000.250.
3905.070 66.		Date jumper spring Insert the date jumper spring in the provided opening.

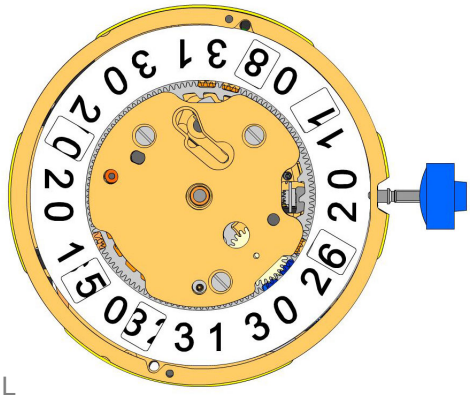

L

3504.215.AD.1.A 67.		Tens indicator (standard) Nick of the indicator at 3 o`clock.
2130.140.G 68.		Date mechanism maintaining plate Date mechanism maintaining plate held by 2 screws 4000.250.
4000.250 69.		Screw
3506.072.G 70.		Dial support
8200 71.		Moebius 8200
9014 72.		Moebius 9014
124 73.		Jismaa 124
9020 74.		Moebius 9020

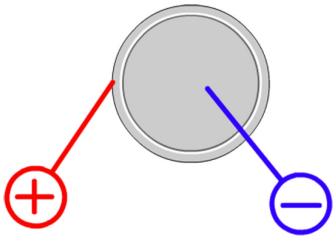

Battery	**395**
Voltage	**1.55 V**

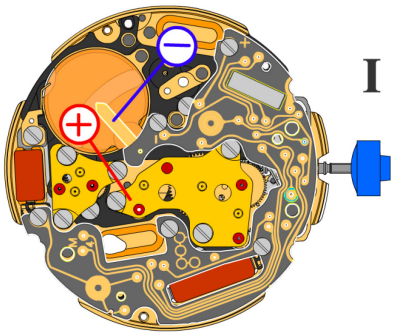

Setting stem in position I, calendar not in gear,
60 s measuring interval for rate and consumption:

Typical consumption	***1.42 µA***
Maximal consumption	***1.65 µA***
Rate	**-10s/M. .. +20s/M.**
Lower working voltage limit	**1.20 V**

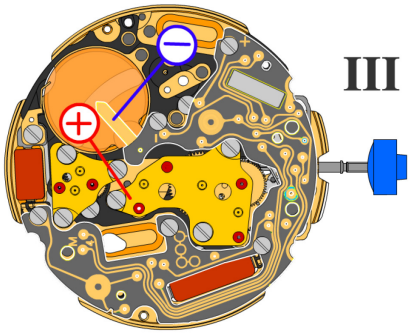

Setting stem in position III, 60 s measuring interval:

Typical consumption	***0.10 µA***
Maximal consumption	***0.30 µA***

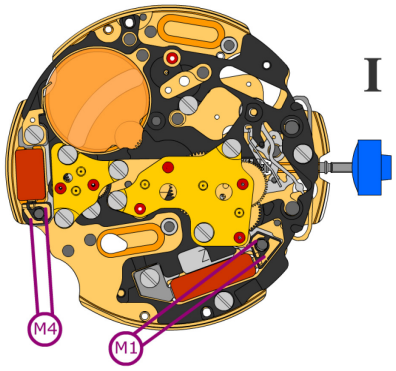

Coil resistance M1	**1.90 kΩ .. 2.10 kΩ**
Coil resistance M4	**1.68 kΩ .. 1.88 kΩ**

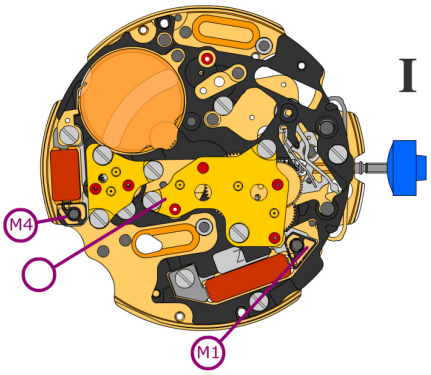

Coil isolation M1/M4	**∞ kΩ**

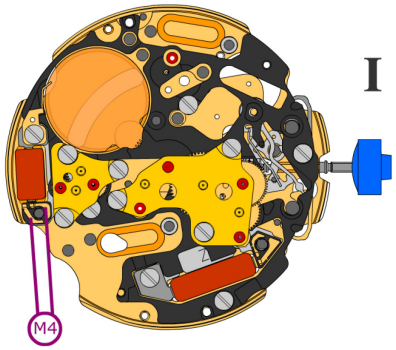

Signal generator (4.9 ms, 8 Hz):

Lower working voltage limit M4	**1.20 V**