EPSON
EXCEED YOUR VISION

Watch Movement Specification and Drawing

STANDARD

Cal. Y120F

Movement Size

6 3/4 × 8'''

Casing Diameter

15.3 × 17.8 mm

Height

2.99mm

Battery Life

3 years

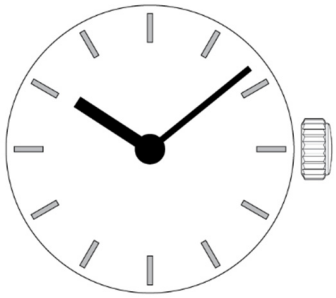

Date: 7/Aug./'20

Cal. Y120F

Items	Rev.	Page
Specifications	01	1
Appearance	01	2
Casing	01	3
Hand fitting	02	4
Hand setting stem	00	5
Dial	00	6
Casing ring	00	7

Cal. Y120F	Specifications	Date : 7/Aug./'20 Rev. : 01

Analog Quartz 6 3/4 × 8''' Standard Series Movement / Two Hands (H/M)

1. MOVEMENT DIMENSIONS

Outside diameter	15.30mm(3-9H) × 18.20mm(12-6H)
Casing diameter	15.30mm(3-9H) × 17.80mm(12-6H)
Total height	2.99mm

2. TIME STANDARD

Type of quartz oscillator	Tuning fork
Frequency of quartz oscillator	32,768 Hz
Accuracy	±20 seconds per month (on wrist)
Operating temperature range	−5℃ to +50℃
Regulation device	Nil (Pre-adjusted)

3. INDICATOR / FUNCTIONS

2 Hands	Hour / Minute	
Reset switch		
Setting mechanism	Crown at normal position	: Free
	Crown pulled out 1st click	: Time setting / Reset

4. FEATURES

Jewels	0 Jewels	
Anti-magnetism	Over 1600A/m (Direct current magnetic field)	
Maximum unbalance of hands	Minute hand	: 0.6μN･m
	Hour hand	: 0.5μN･m

5. BATTERY

Type / Size	Silver oxide battery / φ6.8mm × t 2.6mm
Recommended battery	SR626SW (Maxell, Murata)
Nominal voltage	1.55 V
Battery life	Approx. 3 years
Driving current consumption	Approx. 1.04μA
Operation stopping voltage	1.1 V

6. SEPARATED PARTS (Parts code)

Hand setting stem	0354788 or 0354787
Battery	SR626SW

7. TEST OF ACCURACY

Equipment to be used	SEIKO quartz tester QT-99, Greiner quartz timer-C , Witschi Q-tester 4000
Duration of measurement	10 seconds
Microphone to be used	Electromagnetic detection type

All specifications are subject to change without notice.

Cal. Y120F	Appearance	Date:30/Nov./'18 Rev.:01

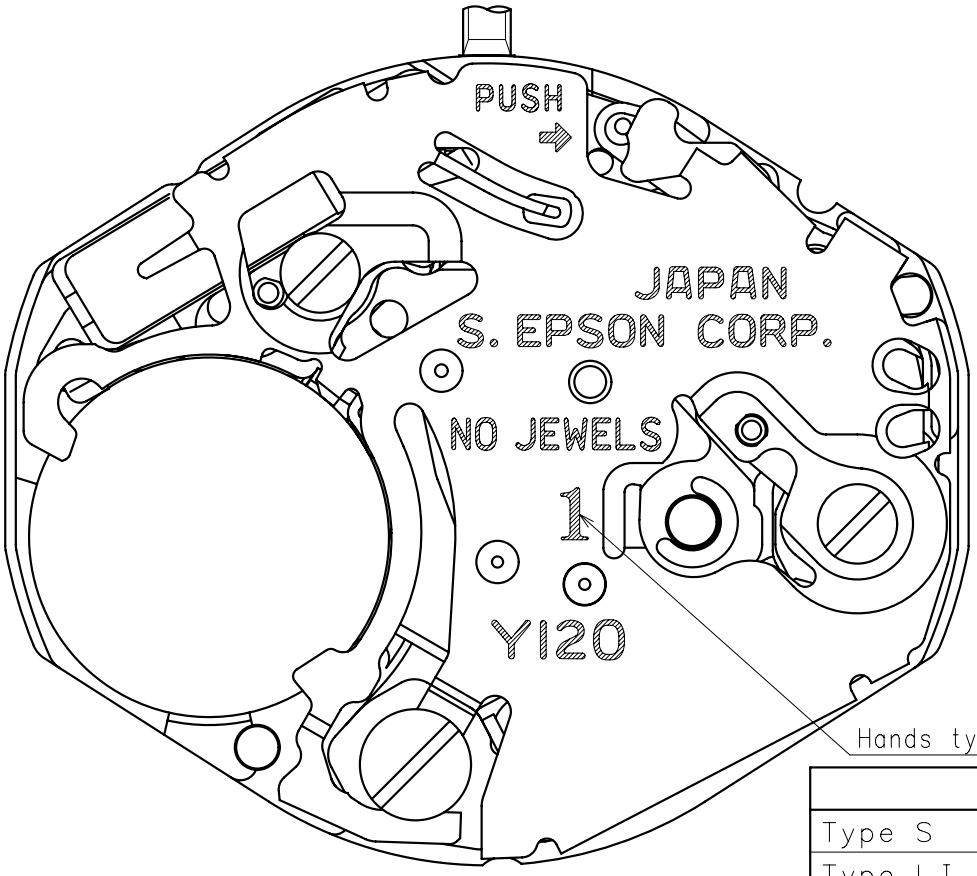

	Mark
Type S (1)	1
Type LI (3)	3
Type LII (4)	4

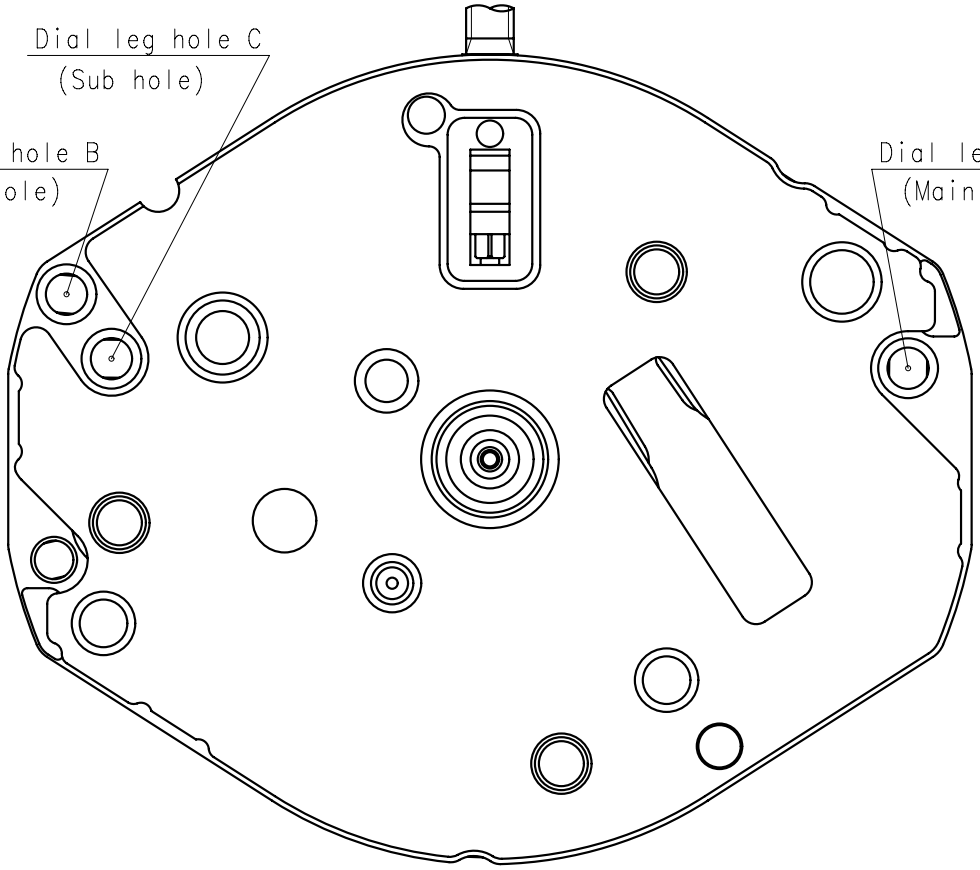

Cal. Y120F	Casing	Date:30/Nov./'18 Rev.:01

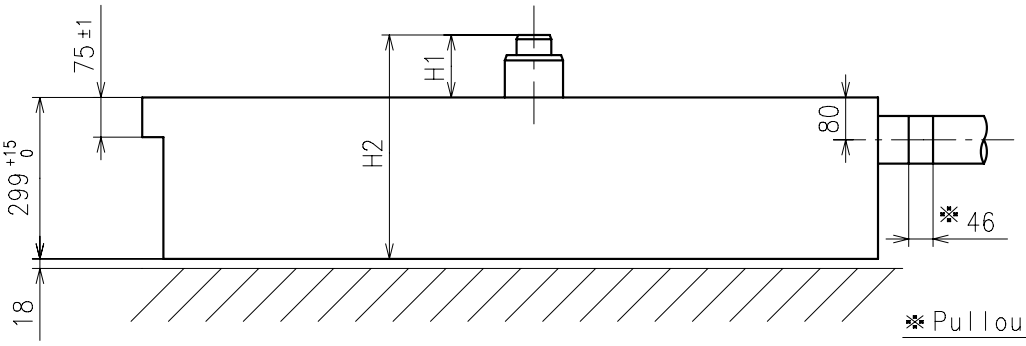

Center post		Type S (1) Y120F1	Type LⅠ(3) Y120F3	Type LⅡ(4) Y120F2
Maximum height from dial support	H1	118	166	226
Total height including movement	H2	417	465	525

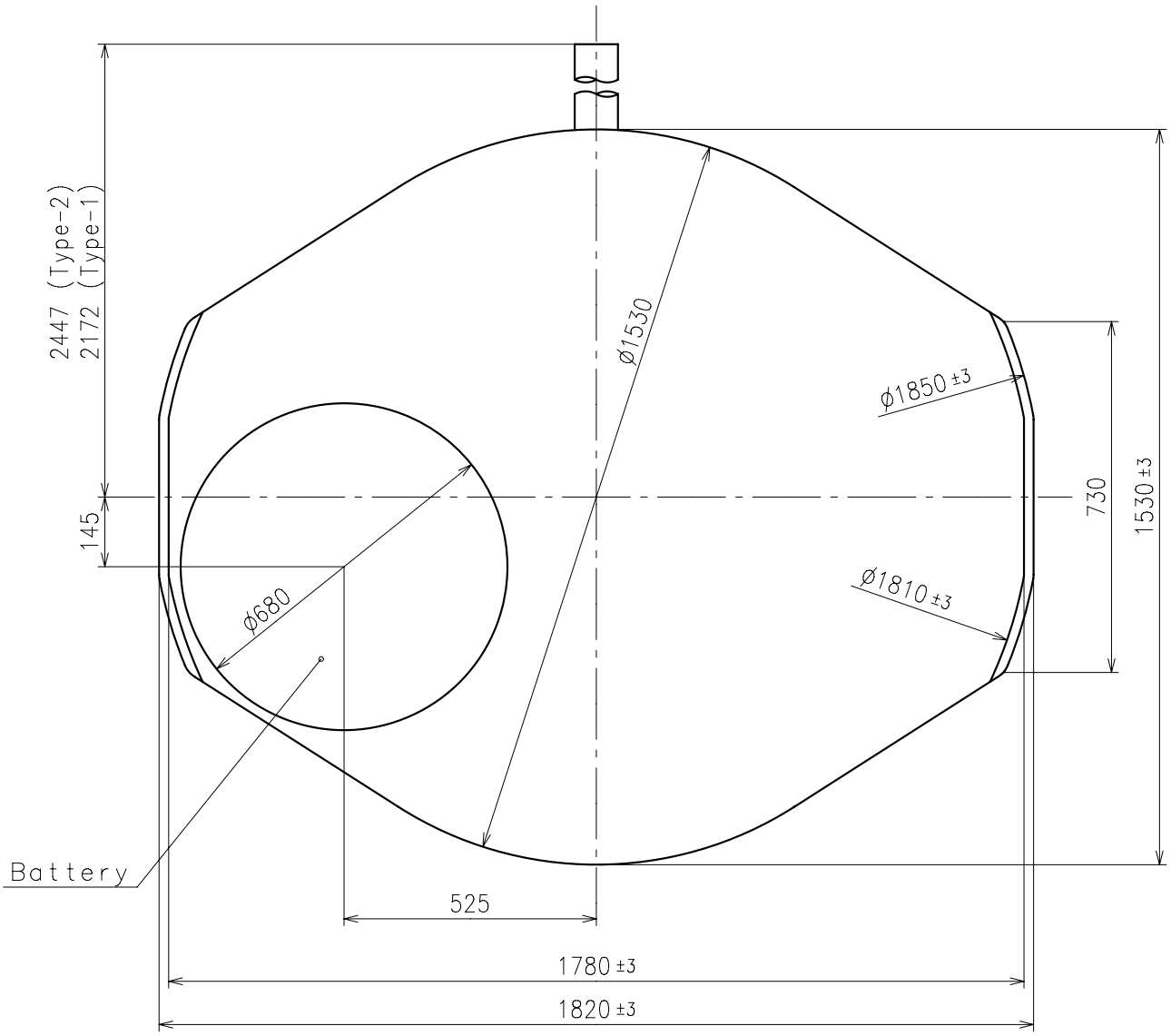

Unit : 1=1/100mm

Cal. Y120F	Hand fitting	Date:30/Jul./'19 Rev.:02

※ Minute hand unbalance ≦ 0.6μ N・m (60μ g・m)
※ Hour hand unbalance ≦ 0.5μ N・m (50μ g・m)

	Parts No.		Dimension	
	Hour wheel	Center wheel	K1	K2
Type S (1) Y120F1	0271796	0221797	52	33.5
Type LI (3) Y120F3	0271764	0221764	52	33.5
Type LII (4) Y120F2	0271797	0221779	60	33.5

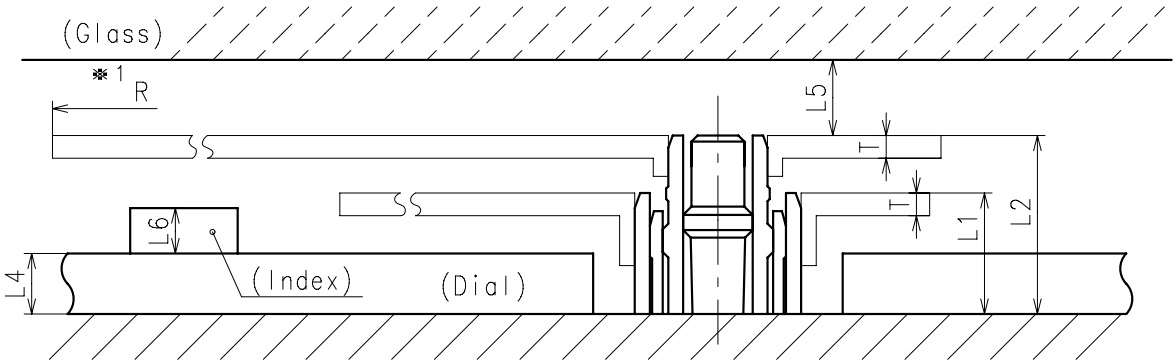

	L1	L2	–	L4	L5	L6	T	※1 R
Type S (1) Y120F1	80	118	–	40	MIN: 50	MAX: 30	15	MAX: 1250
Type LI (3) Y120F3	128	166	–	MAX: 90	MIN: 50	MAX: 30	15	MAX: 1250
Type LII (4) Y120F2	185	226	–	MAX: 150	MIN: 50	MAX: 30	15	MAX: 1250

※1:It is the size taken into consideration for hands attachment.
Please observe some standard value specified in unbalance when using long hands.

Cal. Y120F	Hand setting stem	Date:30/Apr./'18 Rev.:00

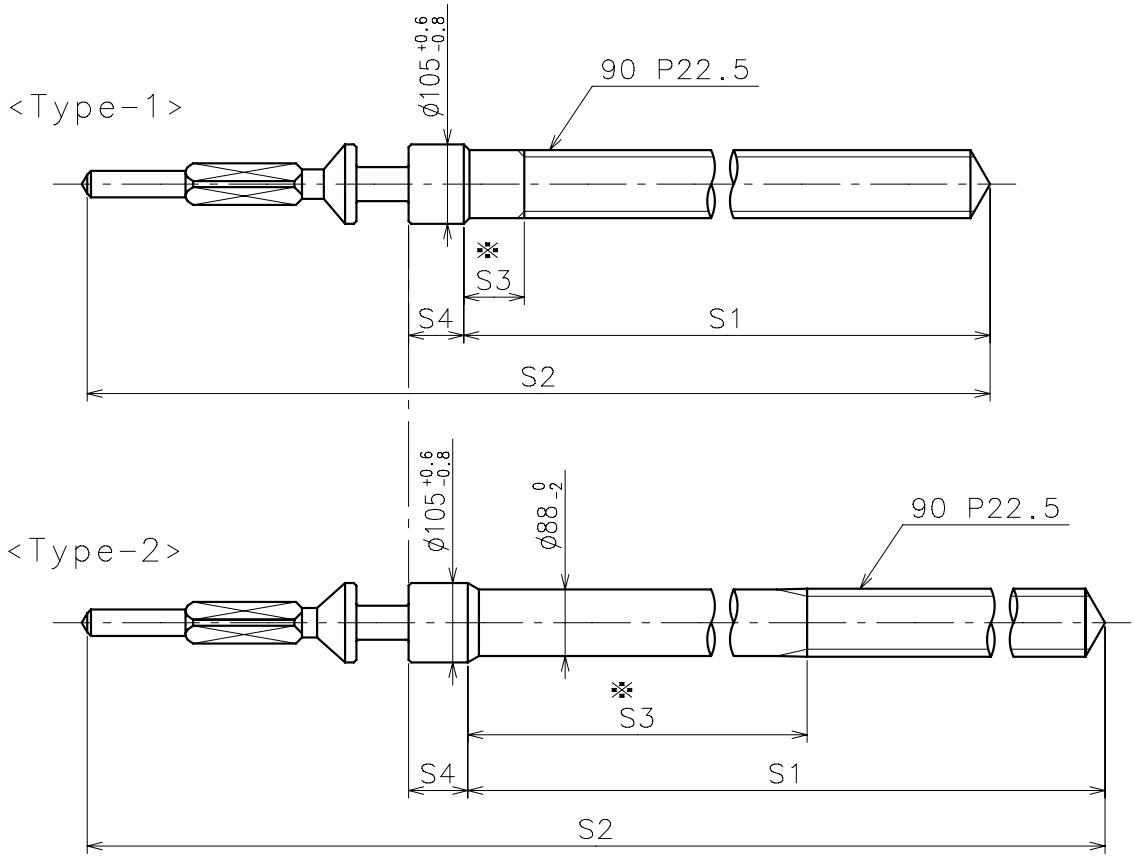

※ Not threaded

	Part No.	S1	S2	※ S3	S4
Type-1 (Standard)	0354788	1473	1971	80	73
Type-2	0354787	1743	2246	887	78

Material : Steel

Hardness : Vickers 530±50

Unit : 1=1/100mm

Cal. Y120F	Dial	Date:30/Apr./'18
		Rev.:00

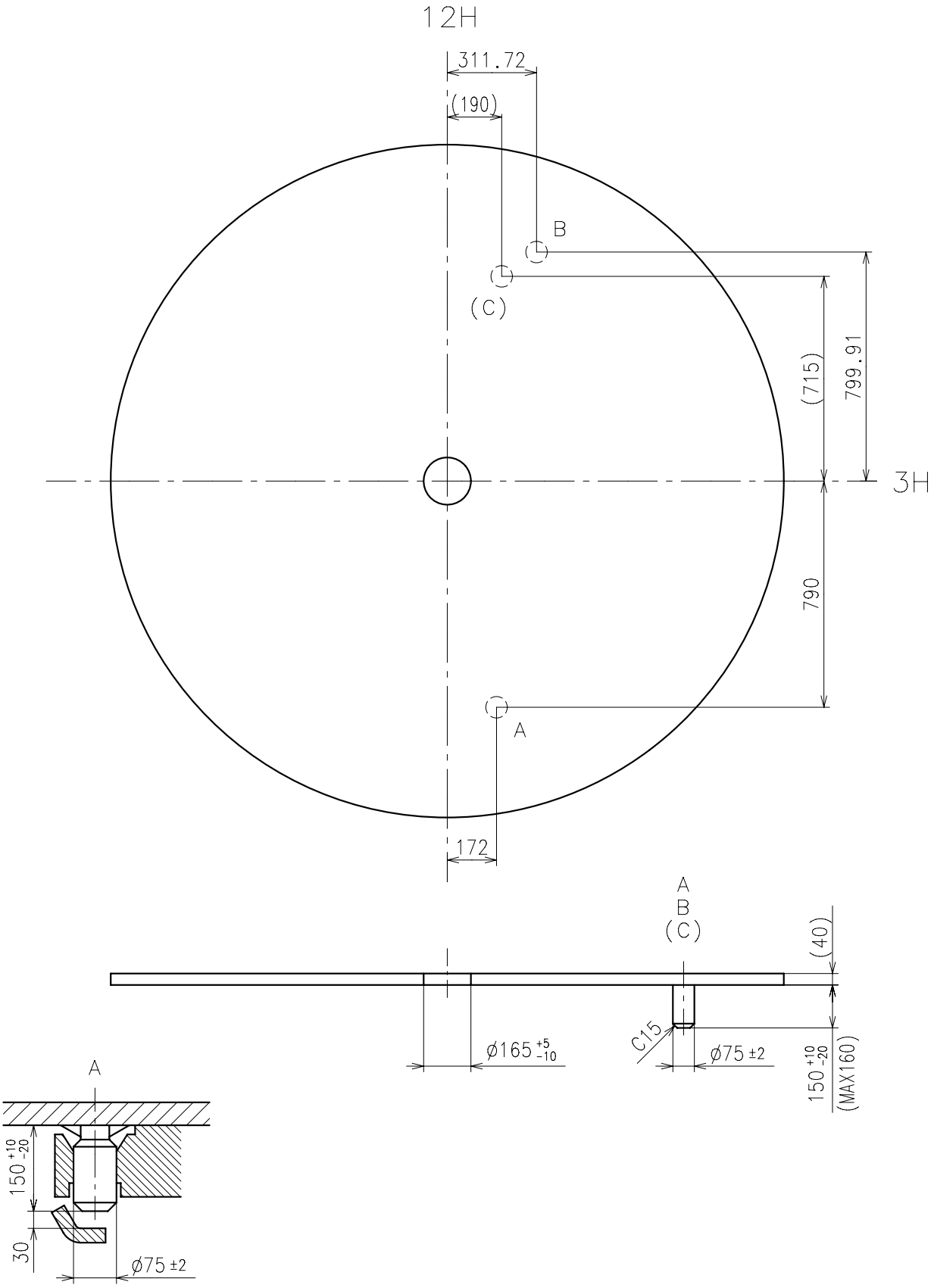

Use dial leg A-B(Main) or A-C(Sub)

Unit : 1=1/100mm

Cal. Y120F	Casing ring	Date:30/Apr./'18 Rev.:00

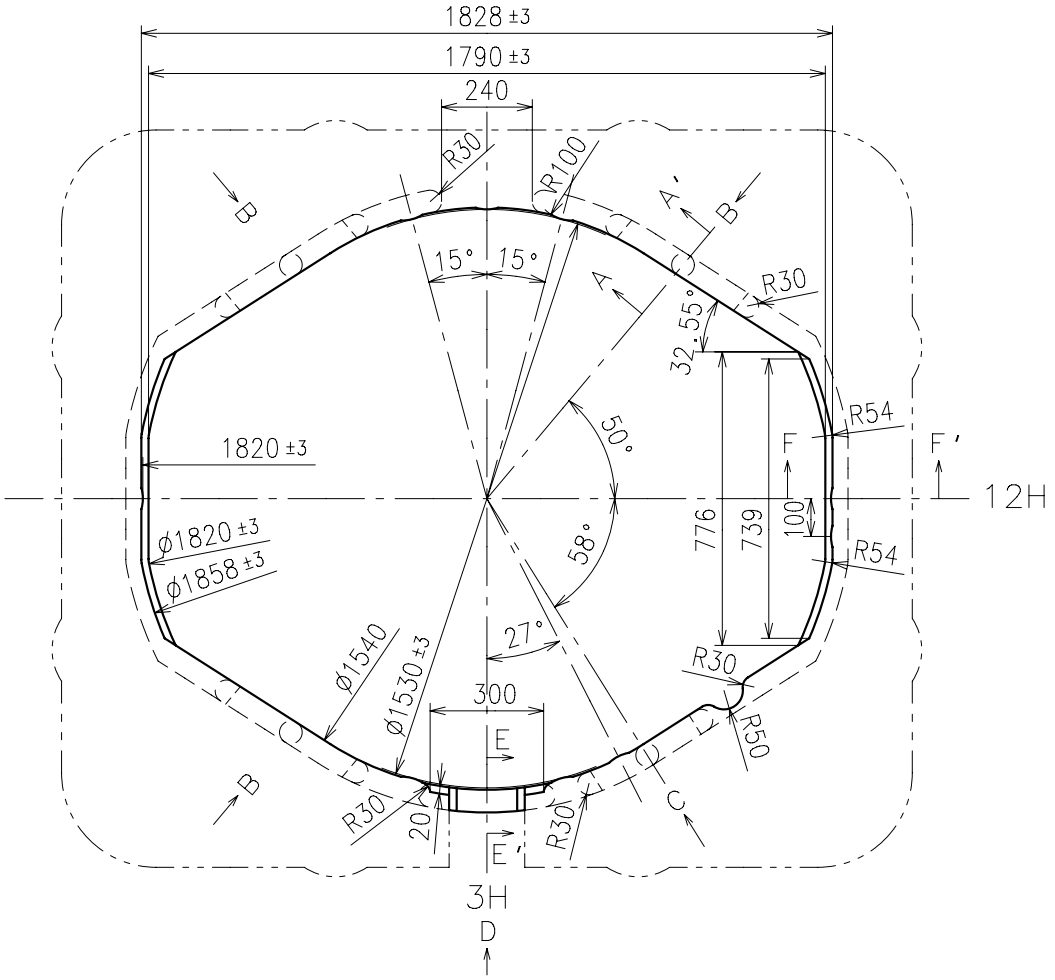

A-A' section

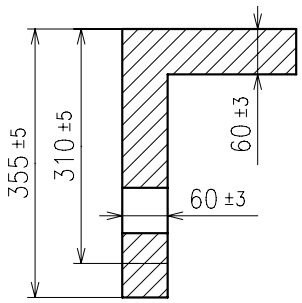

E-E' section

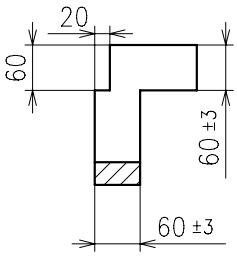

D view

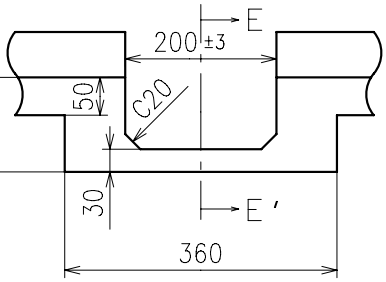

F-F' section

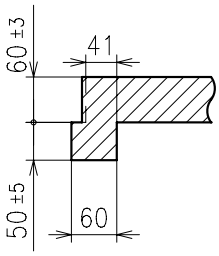

B view

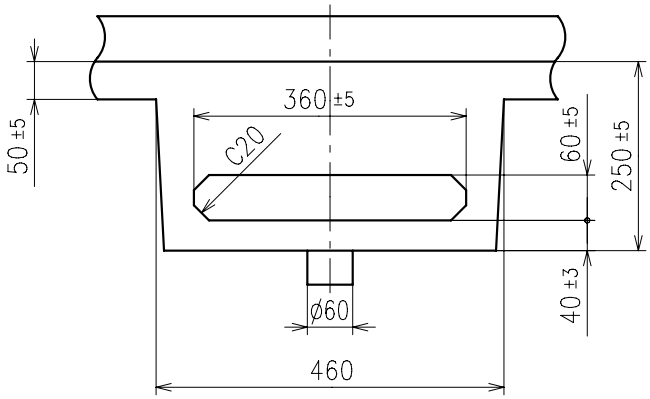

C view

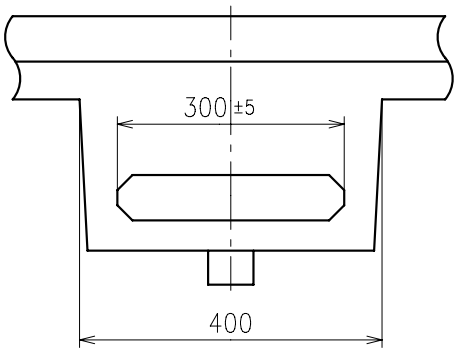

Unit : 1=1/100mm